INSTRUCTION MANUAL

PREMIX UNIT AIR HEATER

TYPE HR

Production from 2019

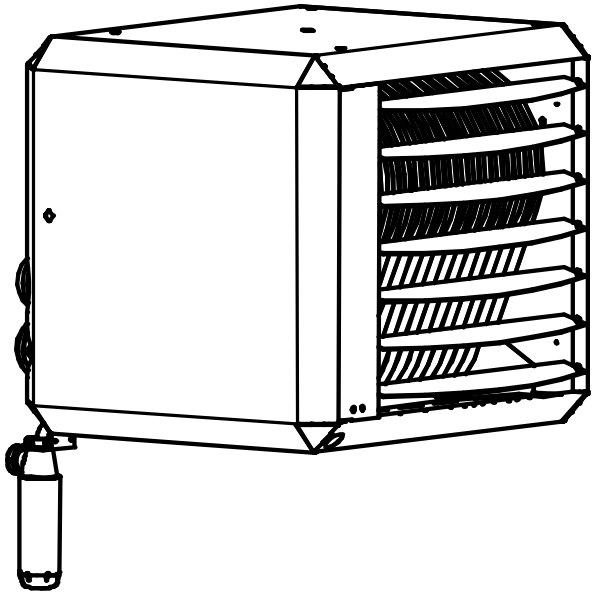

THIS DOCUMENT MUST ABSOLUTELY BE READ BEFORE STARTING THE INSTALLATION.
INSTRUCT USER AND LEAVE THIS DOCUMENT WITH HEATER FOR REFERENCE.

Date: 01-02-2019
Instruction manual version HR-GB-4001-a
Heaters for GB
heaters for natural gas G20 and Propane

Introduction

This installation and user manual is produced specifically for the gas, electrical and mechanical installer , it also gives instructions how to use and maintain the heater.
It is most important to follow the directions in this booklet for safe operation of this product.

1 Content:

2 General

2.1 Safety warnings

The installation and maintenance of this air heater should be performed by an authorized qualified competent installer in accordance with this manual, using calibrated equipment.

This heater must be installed in accordance with the manufacturer's instruction and local codes. The qualified installer needs to follow the local health and safety codes.

This appliance may only be operated and serviced by sufficient instructed people. Failing to follow the instructions can lead to damage to the appliance or the installation.

This appliance can be used by children aged from 8 years and above and persons with reduced physical, sensory or mental capabilities or lack of experience and knowledge if they have been given supervision or instruction concerning use of the appliance in a safe way and understand the hazards involved. Children shall not play with the appliance. Cleaning and user maintenance shall not be made by children without supervision.

Always follow these safety instructions:

- Make sure that the area around the appliance is dry when working on the appliance.
- Always close the doors and inspection hatches unless adjusting and checking the heater.

Before working on an already installed heater:

- Set the thermostat to lowest setting.
- Close the main gas switch. The main gas switch should be situated upstream in the gas line near the heater.
- Turn off all electric power to the appliance

After working on the heater always check for gas leaks.
Close the doors and hatches of the appliance.

2.2 Important checks before installation

2.2.1 Pre-check instructions

Before unpacking and installation, please check (i.e. on the data badge) if the heater is in accordance with the order and if it is suitable for the local present provisions (gas type, gas pressure, electrical supply etc.)
The heater has been tested in detail on safety and correct operating settings before leaving the factory. It has been adjusted for the type of gas that is stated on the data badge. Should there be any doubt, please contact your supplier.

2.2.2 Gas type

The unit is suited for OR Natural gas OR Propane gas. On the labels on the packaging and the heater can the gas type that the heaters is set up for can be found. In case the heater needs to be converted to another gas type contact your supplier. It can only be converted by the manufacturer or its representative.

2.2.3 Standards

The Installation must comply with all applicable local and national standards.
The installation of the air heater must be in accordance with the relevant requirements of the Gas Safety regulations (for example in GB; The Institute of Gas Engineers IGE UP-1 and 2), building regulations and the IIE regulations also incorporating the gas safety (installation and use) regulations. Other national and/or local regulations may apply (the Local Authority ,Fire Officer and Insurers)

2.2.4 Protection from water and dust

The heater is not waterproof. This means that it may not be exposed to rain, spry or dripping water. The IP classification is IP00B
The appliance is not designed for use in a very dusty environment. Dust may accumulate in the heater and may cause a defect of the heater. This is also the case for the room-thermostat.

2.2.5 Protection against dust

The appliance is not designed for use in a very dusty environment. Dust may accumulate in the heater and may cause a defect of the heater. This is also the case for the room-thermostat

2.2.6 Temperature

Do not install the heater in places where the temperature can rise above 35°C. At higher temperatures the internal components will degrade much faster. This is not covered by the guaranty.

2.2.7 Corrosive environment

The heater should not be installed in areas containing any corrosive or explosive vapours. It should be prevented that chlorine or other corrosive containing vapours are sucked into the air intake. These vapours will result in corrosion of the heat exchanger and a leakage of condensate and flue gas. Defects caused by this are not covered by guaranty. Please consult your supplier. This is also the case for the room-thermostat

2.2.8 Installation distances

Keep sufficient distance between the heater and any obstruction , in connection with safety and access for service and maintenance. Pay particular attention to any flammable materials. Please take into account the possibility to open the door of the heater for the necessary service and maintenance work . Make sure the air flow to and from the heater is unhindered. Any obstacles should be a minimum of 5 metres away from the front of the heater. Read the chapter “Installation” carefully.

2.2.9 Condensate discharge

This is a condensing heater. This means a condensate water discharge system should be installed according to local regulations. Never block this discharge.

2.2.10 Maintenance

For the safe and proper operation of the heater periodical maintenance is necessary. When the heater is not serviced and cleaned in time, it could lead to damage of the heater or its surroundings.

2.3 Guarantee

The guarantee becomes void when the air heaters are not installed and serviced in accordance with this manual.

3 Technical details:

Type HR		10	20	30	40	50	60
Maximum nominal heat input (H.I.)	kW	12,5	20,0	30,0	40,0	50,0	60,0
Minimum nominal heat input (H.I.)	kW	4,0	6,0	9,0	12,0	15,0	18,0
Efficiency max. power	%	96,0	96,0	96,5	97,0	96,5	96,6
Efficiency 30% power	%	106,0	106,0	106,0	106,5	106,0	106,0
Maximum heat output	kW	12,0	19,2	29,0	38,8	48,3	58,0
Minimum heat output	kW	4,2	6,4	9,5	12,8	15,9	19,1
Max air output (warm)	m3/hr	2.000	2.600	3.000	4.500	5.000	6.000
Throw horizontal (max)	m	15	20	23	26	28	30
Gas connection	G”	½” bin	½” bin	¾” bui	¾” bui	¾” bui	¾” bui
Electrical Voltage [50 Hz]	V	230	230	230	230	230	230
Electrical power max.	kW	0,250	0,250	0,250	0,450	0,450	0,600
Electrical power min.	kW	0,250	0,250	0,250	0,450	0,450	0,600
Electrical power standby	kW	0,004	0,004	0,004	0,004	0,004	0,004
Electrical current	A	1,1	1,1	1,2	2,0	2,6	2,6
Emission efficiency, (ηs,flow)	%	97,6	96,4	94,6	95,0	94,8	94,6
Seas. space heating efficiency	%	90,4	90,1	88,7	89,9	89,2	89,4
NOx emission (GCV)	mg/kWh	30	21	33	40	31	44
NOX class		5	5	5	5	5	5
Flue amount max.	kg/hr	19,4	31,1	48,3	64,2	80,2	96,2
Thermostat bus system (low voltage)		Yes	Yes	Yes	Yes	Yes	Yes
Sound level (average @ 4 meter)	dBA	45	45	45	47	48	49
Suspension height horizontal throw min.	m	1,7	1,7	1,7	1,7	1,7	1,7
Flue length max.	m	9	9	9	9	9	9
Weight	m	45	50	75	85	105	110
Natural gas G20, heater version 3.3							
Nominal supply pressure G20	mbar.	20					
Supply pressure (min-max) G20	mbar.	17-25					
Gas category	Cat.	I2H					
Class	Class.	B23, C13, C33					
Max gas consumption G20	m3/hr	1,3	2,1	3,2	4,2	5,3	6,3
CO2 High G20	%	9,5	9,5	9,2	9,2	9,2	9,2
CO2 Low G20	%	9,0	9,0	8,8	8,8	8,8	8,8
CO (@ 0%O2)	mg/kWh	4	5	1	1	3	3
Propane, G31, heater version 3.4							
Nominal supply pressure G31	mbar.	30-50					
Supply pressure (min-max) G31	mbar.	25-50					
Gas category	Cat.	I3P					
Class	Class.	B23, C13, C33					
Max gas consumption G31	kg/hr	1,0	1,6	2,4	3,2	4,0	4,8
CO2 High G31	%	10,7	10,7	11,0	11,0	11,0	11,0
CO2 Low G31	%	10,3	10,3	10,5	10,5	10,5	10,5
CO (@ 0%O2)	mg/kWh	13	8	3	1	1	1

HR80, 100, 120

The HR80 & 100 & 120 have double heat exchangers placed on top of each other with combined connections.

Type HR		**80**	**100**	**120**
Maximum nominal heat input (H.I.)	kW	80,0	100,0	120,0
Minimum nominal heat input (H.I.)	kW	24,0	30,0	36,0
Efficiency max. power	%	97,0	96,8	96,5
Efficiency 30% power	%	105,0	105,0	105,0
Maximum heat output	kW	77,6	96,8	115,8
Minimum heat output	kW	25,2	31,5	37,8
Max air output (warm)	m3/hr	8.500	10.000	12.000
Throw horizontal (max)	m	30	30	33
Gas connection	G”	1” int.	1” int.	1” int.
Electrical Voltage [50 Hz]	V	230	230	230
Electrical power max.	kW	0,900	1,000	1,050
Electrical power min.	kW	0,900	1,000	1,050
Electrical power standby	kW	0,010	0,010	0,010
Electrical current	A	3,9	4,4	4,7
Emission efficiency, (ηs,flow)	%	95,5	95,6	95,5
Seas. space heating efficiency	%	88,8	89,0	89,1
NOx emission (GCV)	mg/kWh	38	33	36
NOX class		5	5	5
Flue amount max.	kg/hr	128,4	160,4	192,4
Thermostat bus system (low voltage)		Yes	Yes	Yes
Sound level (average @ 4 meter)	dBA	50	51	52
Suspension height horizontal throw min.	m	1,7	1,7	1,7
Flue length max.	m	9	9	9
Weight	m	180	195	205
Natural gas G20, heater version 3.3				
Nominal supply pressure G20	mbar.	20		
Supply pressure (min-max) G20	mbar.	17-25		
Gas category	Cat.	I2H		
Class	Class.	B23, C13, C33		
Max gas consumption G20	m3/hr	8,4	10,6	12,6
CO2 High G20	%	9,2	9,2	9,2
CO2 Low G20	%	8,8	8,8	8,8
CO (@ 0%O2)	mg/kWh	1	3	3
Propane, G31, heater version 3.4				
Nominal supply pressure G31	mbar.	30-50		
Supply pressure (min-max) G31	mbar.	25-50		
Gas category	Cat.	I3P		
Class	Class.	B23, C13, C33		
Max gas consumption G31	kg/hr	6,4	8,0	9,6
CO2 High G31	%	11,0	11,0	11,0
CO2 Low G31	%	10,5	10,5	10,5
CO (@ 0%O2)	mg/kWh	1	1	1

Type 10 & 20

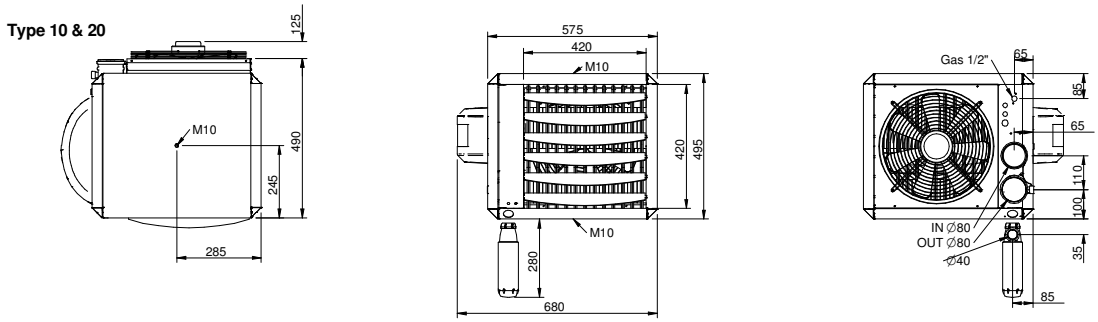

Type 30 & 40

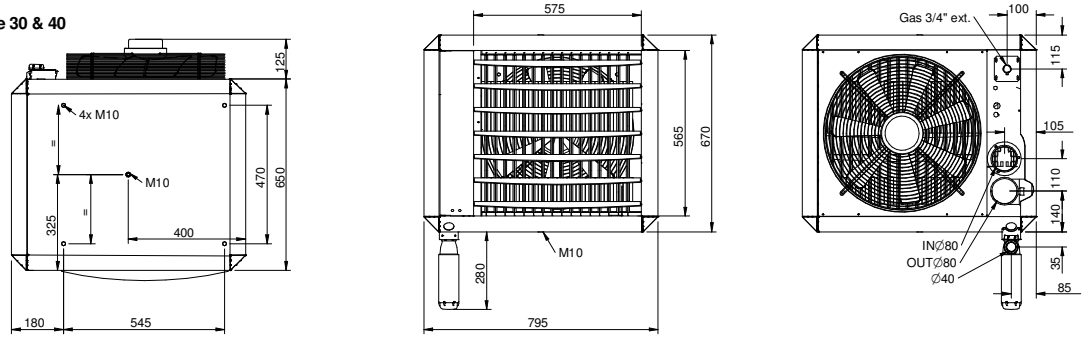

Type 50 & 60

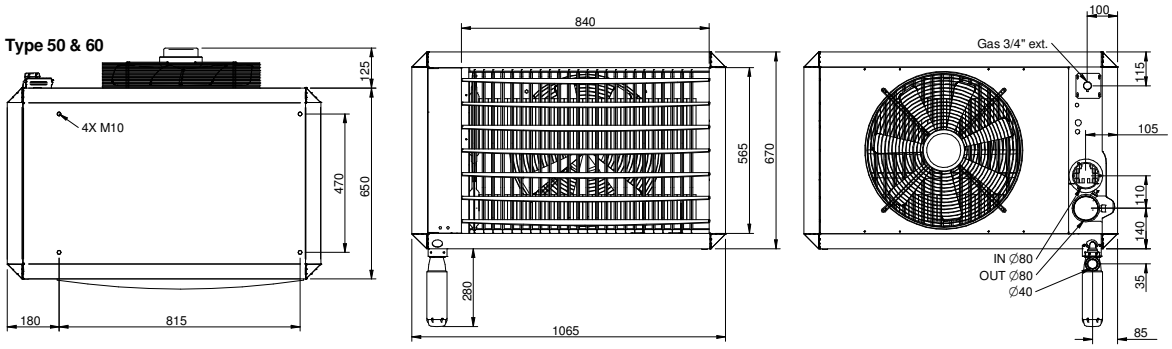

Type 80, 100 & 120

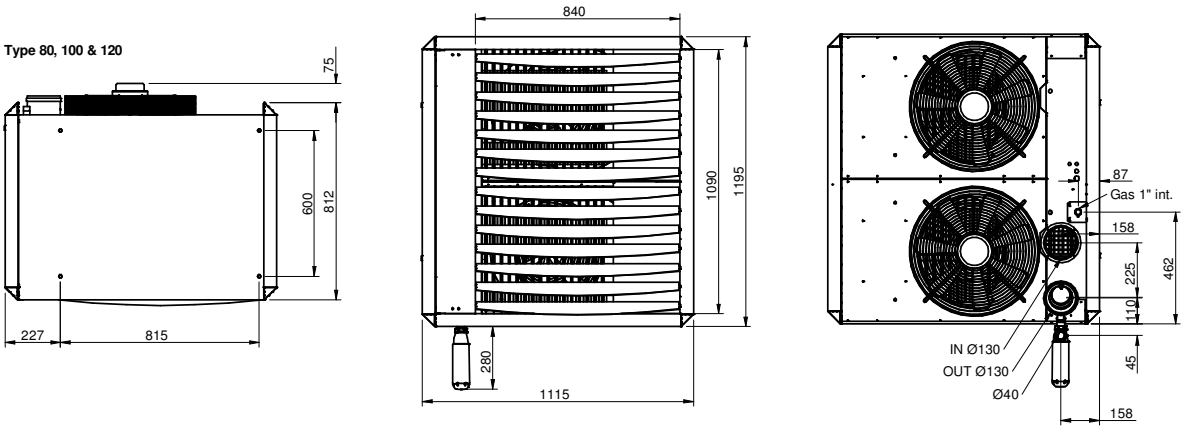

4 Installation

4.1 Positioning

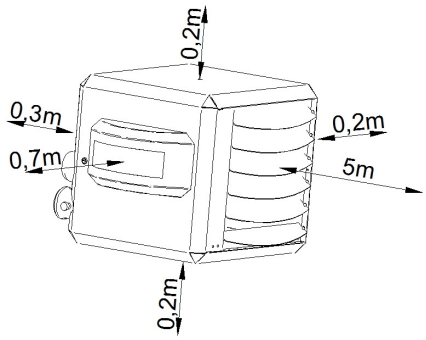

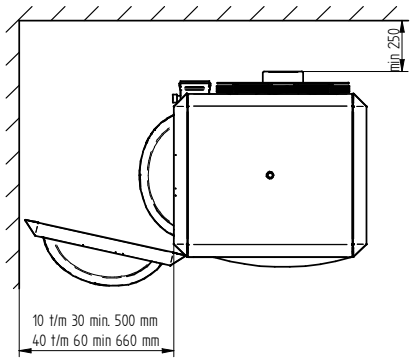

- Check that the support is solid enough.
- The heater is designed as free hanging. The heater should be able to blow the warm air free from any ducting or obstacles. Also the air intake should be free.
- Keep sufficient distance between the heater and any obstruction , in connection with safety and access for service and maintenance. See the drawings in this chapter. Pay particular attention to any flammable materials. Please take into account the possibility to open the door of the heater for the necessary service and maintenance work . Make sure the air flow to and from the heater is unhindered. Any obstacles should be a minimum of 5 metres away from the front of the heater.
- The heater can be installed horizontally or on an angle of maximum 45 degrees downwards.
- When the heater is installed other than horizontal, Always re-adjust the CO2 setting from the gas valve.
- The heaters type 10 and 20 are provided with 2 off M10 threaded sockets as fixing points (see the dimension diagram).
- The types 30 and 40 have in the middle a M10 socket and also 4 sockets on the top corners of the heater
- The types 50 and 60 have on the top and bottom 4 M10 sockets. (see drawings)
- Use preferably the Winterwarm suspension kits.
- Make sure that after fitting, there is no mechanical tension on any connecting gas or electric supplies.
- If the heater is installed with the air stream vertical downwards the maximum suspension height is 8 meters. Otherwise the warm air will not reach the floor.

Attention:
See the application-restrictions in this manual (Chapter 2) for further installation restrictions.

Available suspensions:

Standard bracket for type HR10 to 40
Horizontal

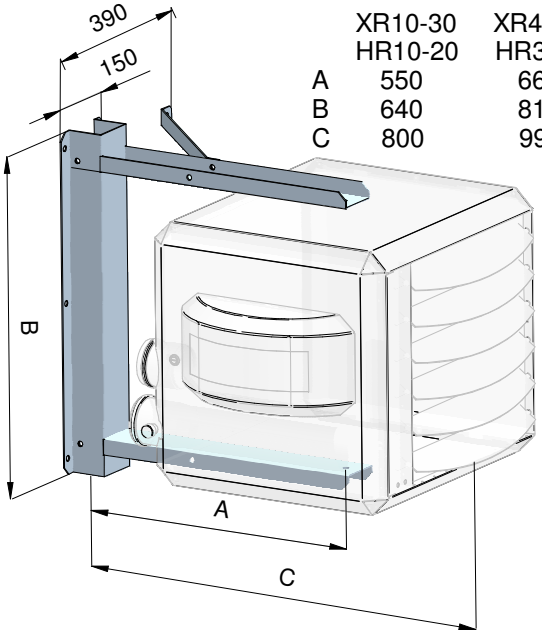

	XR10-30 HR10-20	XR40-60 HR30-40
A	550	665
B	640	815
C	800	990

Design bracket type HR10 and 20
horizontal

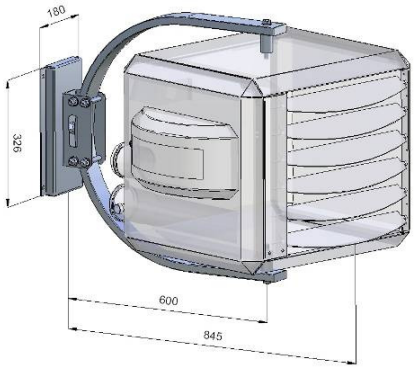

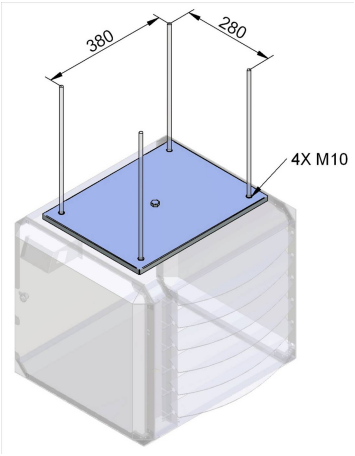

Suspension adapter for type HR10 and 20
M10 threaded bar

Wall console set HR30 up to 120
Art. Nr. : GA8580

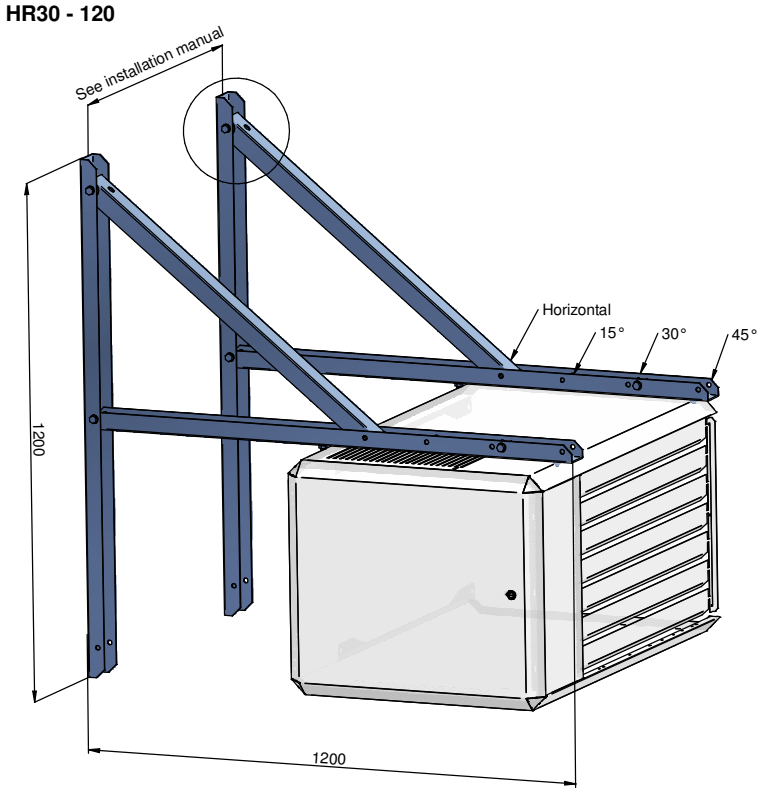

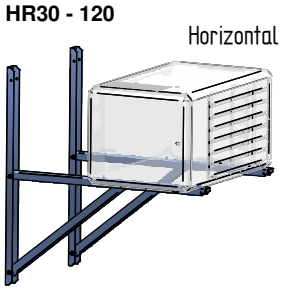

4.2 Gas connection

The gas supply line has to meet the national valid requirements and possibly the local requirements of the building inspector, police or fire brigade. (In GB it must comply with Gas Engineers publication UP-1 and UP-2 together with BS 6891.

A manual isolation valve in the supply line must be placed within reach of the heater, and all gas lines must be mounted without any mechanical tension.

When testing the supply lines with pressures above 60 mbar, this manual valve at the heater must be closed.

The working and standing supply pressure must be a minimum of 17 mbar, and a maximum of 30 mbar ,measured at the inlet pressure nipple of the gas control in the heater

In case the heater needs to be converted to another gas type contact your supplier. It can only be converted by the manufacturer or its representative.

4.3 Electrical connection

4.3.1 230Vac supply

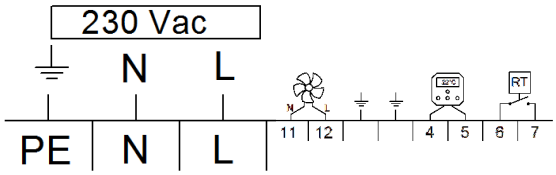

The installation must comply with local and national requirements, (as well as IEE regulations)

Never use a room thermostat to interrupt the electrical supply to the heater!

Make provisions to completely isolate the heater for maintenance purposes. This can be an isolation switch (min.3mm contact opening gap) , a power plug or a non-switched fuse spur.

The wiring diagram for the heater can be found towards the end this manual.

The supply is 230Vac. <u>with earth</u>. The control circuit is a two wire low voltage bus communication.

4.3.2 Room thermostat

The heater can only be controlled by special modulating Winterwarm room thermostats:

The Multi Therm Comfort; modulating digital clock thermostat with optimiser. It can control 1 to 8 air heaters HR10 up to HR60 or 1 to 4 air heaters HR80 up to 120.

The Multi Therm Standard; modulating digital thermostat. It can control 1 to 8 air heaters HR10 up to HR60 or 1 to 4 air heaters HR80 up to 120.

The Interface printboard; special designed interface module for connecting the air heaters with Building Mangagement Systems. (0-10V (modulating input) signal, high/low signal, external reset and other different in and outputs.

ON/OFF thermostat

The heater cannot be controlled with a simple on/off thermostat.

In all cases the communication between heater and thermostat is based on a two wire, low-voltage connection. In the appliance the wire for the thermostat has to be connected to connection 4 and 5 (see also electrical wiring diagram) Attention: This also needs a change in the settings on the print board.

4.3.3 Thermostat installation

When mounting the thermostat, take attention to the following items:

- Mount the thermostat in a place where the air can circulate free pass the thermostat. Take notice that the sun does not shine directly upon the thermostat (in the winter). Do not place the thermostat on a cold wall. Place the thermostat on an inner wall free from draught.
- Never place the thermostat within the throw of the heater.
- Never mount the thermostat near aerials of internal communication networks. These emit radiation that could lead to disturbance of the thermostat. Always keep some meters distance.
- In all cases the communication between the heater and the thermostat is based on a two wire, low-voltage connection. In the appliance the wire for the thermostat has to be connected to connection 4 and 5 (see also electrical wiring diagram).

Cable specification: signal cable, 1x2x0,8 (shielded and twisted)
Maximum length 250m.

If the cable is chosen too thin, the signal will become too poor. If the cable is not shielded and twisted the signal might become disturbed in an EMC unfriendly environment.
Keep the thermostat cable separated from mains cables. Connect the earth shield of the cable only to the earth terminal in the heater.

If these guidelines are not followed it may result in malfunction of the installation or worse, it could damage the thermostat or the electronics in the heater.

4.3.4 Fuse

On the heater control board there is 1 fuse. See electrical wiring diagram.
F1 and in the power supply of the heater. Replace the fuse only by a fuse of the same type, 5AT

4.4 Air intake / combustion products discharge

Check for compliance with local / national regulations.
Only the described flue material may be used. This goes for the roof or wall terminal and also for the piping between the heater and the terminal. Only so the installation is approved.
Always connect a roof or wall terminal for condensing appliances, otherwise condensate can form ice in the winter on the terminal.
In some cases the roof terminal has to be at least 0,5m above roof level (depending on local regulations).

Pay attention on fresh air ventilation openings on the building. There are local distance restrictions on placing a flue terminal near the ventilation openings.

4.4.1 Flue material

It is only allowed to use CE marked flue material from the manufacturer Muelink & Grol (M&G) and Burgerhout, type Alu-fix temperature class minimum T120.. These Flue systems can be bought at your supplier.

Only use one flue pipes from the same diameter as the flue spigots on the heater.

Different manufacturers have different connections systems from the flue pipes. It is not allowed to combine systems from different manufacturers.

4.4.2 Maximum flue length

The maximum pressure drop in either the air supply pipe, or the flue pipe ,must not exceed 9 metres straight pipe , excluding the terminal. Whenever bends are used the pressure drop is greater and therefore a 90° bend will count as 2 metres and a 45° bend as 1 metre. All flue pipes must be of the same diameter as the flue spigots on the heater, and all flue joints must be sealed. For further information regarding the flue system please contact your reseller.

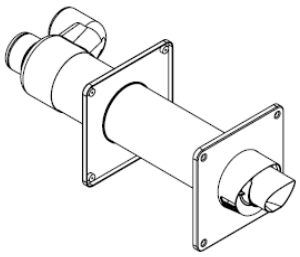

4.4.3 Flue terminals

Only the flue terminals that are provided with the heater may be used.
These terminals are certified together with the heater.

The following terminals are allowed:

HR10-60

- Concentric roof terminal type M&G Skyline 80-80 article: IA8214
  - for h>0,5m above roof IA8217
- Concentric wall terminal type M&G HR80-80 article: IA8216

HR80-120

- Concentric roof terminal type M&G 130-130 HR article: IA8307
- Concentric wall terminal type M&G 130-130 HR article: IA8314

The following flue terminals are allowed:

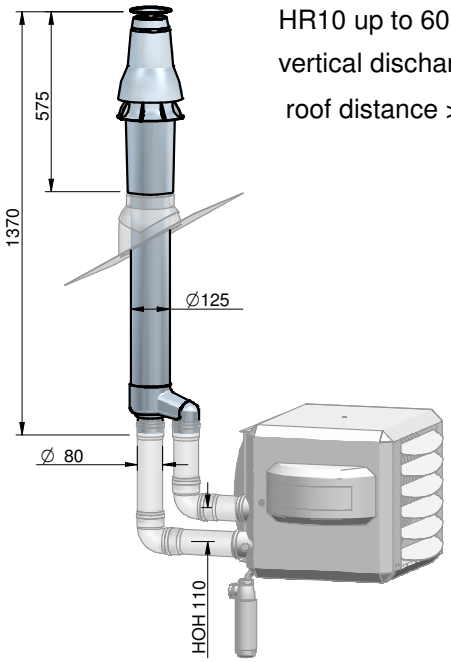

HR10 up to 60
vertical discharge: art.: IA8214
roof distance >0,5m: IA8217

HR10 up to 60
horizontal discharge art.: IA8216

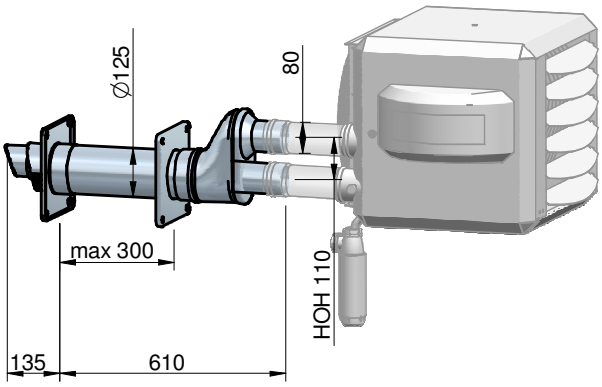

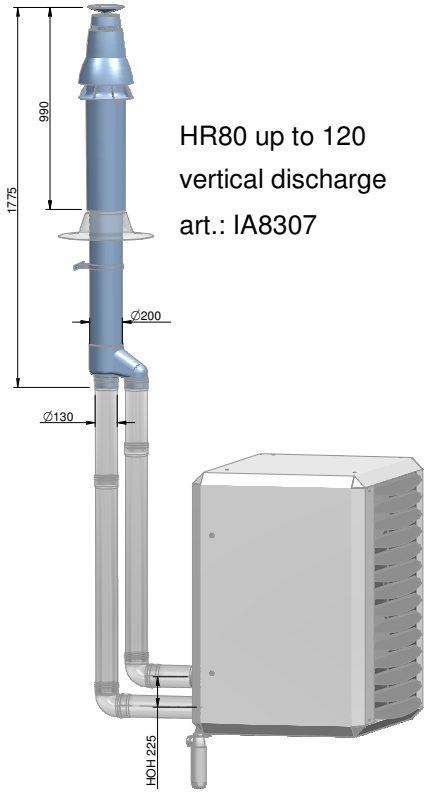

HR80 up to 120
vertical discharge
art.: IA8307

HR80 up to 120
horizontal discharge
art.: IA8314

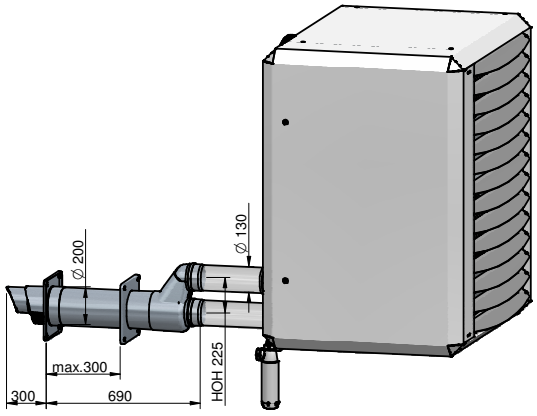

4.5 Condensate discharge

The condensate discharge pipe is on the bottom of the heater. The separate delivered siphon has to be connected to the condensate Ø40mm PVC pipe. On the siphon a pipe Ø 40mm can be mounted. The discharge system after the sifon has to be minimum Ø25mm and mounted with an inclination to the sewer. The advised inclination should be minimum 50mm per meter. The horizontal length should not exceed 5 meter.

The condensate should connected according to local and national regulations. Do not let the condensate drip on the roof or roof edge outside the building, dangerous ice can be formed in the winter. Condensate should be drained away to the sewer.

The condensate outlet from the heater should never be closed.
Protect the condensate drain from freezing. Ice can also close the condensate drain.

To be sure that the condensate can always flow out of the heater, an extra siphon should be mounted before connecting to the sewer.

When the condensate discharge system is placed the siphon has to be filled with water. This is important because otherwise the flue gases can flow into the room where the heater is placed.

HR10 up to 120
Horizontal

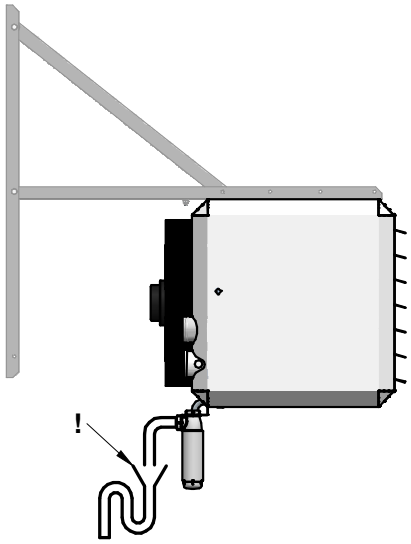

Max. amount condensate rate:

	HR10 HR20	HR30/35 HR40	HR50 HR60	HR80	HR100 HR120
Max. Condensate l/h	2	3	4	6	8

4.6 Installation Roof or Wall terminal

Algemeen

- Check the components on possible damages.
- Combine only with components from same materials and manufacturer.
- Install after national regulation.
- Outside can be cleaned with a wet towel or with some detergent.

Installation Roof terminal

1. Check the components on possible damages.
2. Taking the roofing into account, determine the type of weather collar synthetic file or universal pitched roof flashing; for a flat roof an aluminium flat roof flashing.

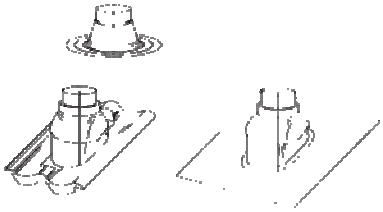

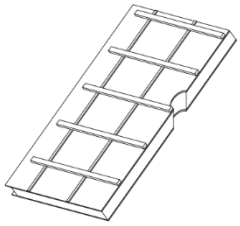

3. Determine where the flue terminal will be positioned.
4. Make a hole for the flue terminal from the outside. Ensure that no saw dust or dust gets into the appliance.
5. Fit the weather collar..
6. Carefully insert the flue terminal through from the outside. Attention: do not tum the cap.
7. Put the flue terminal into a vertical position using an air level. (If desired, cover plates, to be supplied separately,can be fitted)

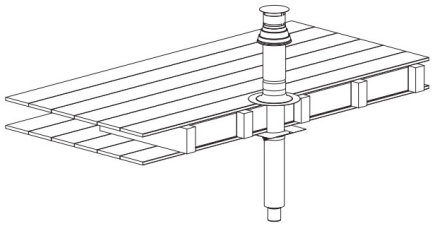

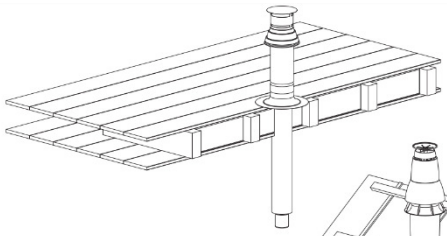

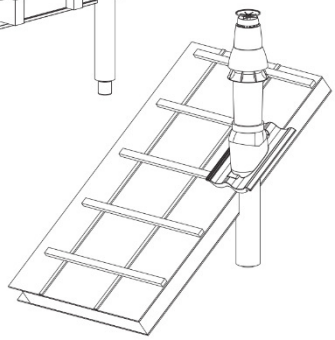

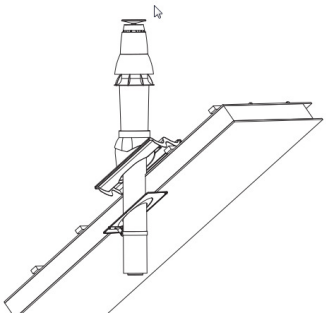

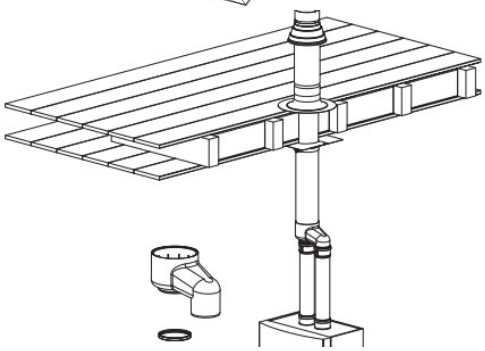

8. Fix the supplied wall clamp round the flue terminal and fit it to the roof construction. Do not tighten the clamp yet.
9. Fit the gasket and the twin-tube connection. Make sure that the gasket is not damaged. Ensure that the flue tube and the air inlet tube are not exchanged; the flue tube is the pipe in the centre of the flue terminal.
10. Finally, secure the roof wall clamp and check that all steps have been carried out correctly.

Installing Wall terminal

1. Check the components on possible damages.
2. Determine where the flue terminal will be positioned.
3. Make a hole for the flue terminal. Ensure that no saw dust or dust gets into the appliance.
4. Carefully insert the flue terminal the outside. Attention: do not tum the cap.
5. Fix the terminal horizontally using an air level
6. Mark the holes and drill the holes in the outside wall for the fixation of the terminal.
7. Fix the terminal with screws. Eventually seal the fixation with kit.
8. Fix the shield on inner wall.
9. Fit the gasket and the twin-tube connection. Make sure that the gasket is not damaged. Ensure that the flue tube and the air inlet tube are not exchanged; the flue tube is the pipe in the centre of the flue terminal.
10. .Check that all steps have been carried out correctly.

4.6.1 Installation from the flue system parts

These basic instructions are for the flue material that go with this heater.

Elements system ALU FIX thick wall

General

- Distance to conbustionable materials around the flue parts minimal 40mm.
- Use the brackets that go with the flue system.
- Different manufacturers have different connections systems from the flue pipes. It is not allowed to combine systems from different manufacturers
- The female sockets should have an depth of minimal 40 mm.
- Install without mechanical force on the parts.
- Inclination towards the appliance of 3 degrees (50 mm per meter) to allow the condensate to flow to the heater.

Sealings

- If the flue parts need to be cut, Clean and round the edges. Sharp edges will damage the seal.
- Follow the instructions from the manufacturer when the connections need to be fixed.
- Do not drill or screw in the parts.!
- Do not try to seal with kit, foam or tape.
- Lubricate the connections only with allowed lubricant from the manufacturer. Maximum 1% of soap or water is allowed.
- ATENTION! Do not use grease, Vaseline or oil

Fixation

- Fix every elbow on or near the socket.
  - Exception when connecting the appliance: when the flue pipes before and after the elbow are shorter than 0.25m, then the 2nd element after the elbow needs to be fixed with a bracket.
- Horizontal and non-vertical flue pipes:
  - Maximum distance between brackets 1 m.
  - On tensile joints, (following the manufacturer's instructions) Maximum distance between brackets 2 m.
  - The distance between the brackets should be spread out equally.
- Vertical piping:
  - Maximum distance between brackets 2 m.
  - The distance between the brackets should be spread out equally.
- Inside a shaft:
  - Check the components on possible damages or blockage..
  - Check that the pipe is under the right inclination.
  - Mark the flue pipes and fresh air pipes to avoid a mistake.
  - Check that the pipes extend minimum 50mm when going through a wall or other obstacle.
  - Fix the last element before entering the shaft. If this is an elbow, also the 2nd element may be fixed.
- ATENTION, every system needs to have at least 1 bracket. The first bracket needs to be within the first 0,5m from the appliance..

5 Functioning of the unit

5.1 General

The unit can heat as well as ventilate. By using the temperature-sensor on the unit and the one in the room-thermostat, the temperature-difference between the two in the room is monitored. Should the difference become higher than a set value, due to the fact that warm air has accumulated underneath the roof, the system-fan will start and push the warm air down, acting as a de-stratification fan.

5.2 Burner cycle

The status and burner cycle is showed on the display in the heater

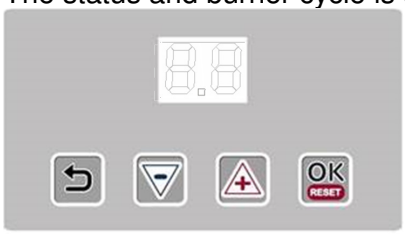

Display	Status	Description
0	Init	Initialisation of the control board
1	Reset	Software reset
2	Stand-by	Standby, waiting for heat demand
3	Pre-check	Zero position check pressure switch
4	Pre-purge	30 seconds of pre ventilation from the combustion fan. The pressure switch is checked.
5	Pre-ignition	Ignition without opening the gas valve
6	Igniting	Ignition (5 sec), gas valve opens
7	Flame check	Check if the flame is present
8	Burn	The heater burns and starts to modulate.
9	Minimum	Before the flame stops, the burner will modulate to minimum power
10	Burner off	Gas valve closes, the flame stops
11	Post Purge	Burner fan purges with fresh air System fan cools the heat exchanger

Minimum burn time 4 minutes!
The heater will always burn minimum 4 minutes, even if the heat demand stops. This to avoid an unnecessary large amount of start and stops.

The heater will try 2 times to ignite before it stops and gives an error.

5.3 Delta-T-regulation (temperature controlled de-stratification fan)

In case there is no heat demand, the delta-T-regulation will be active.
When the temperature-difference between the sensor on the unit (the NTC) and the sensor in the thermostat is bigger than the set value (factory setting standard 8°C), the system fan will start, at a regulated speed, depending on the differential temperature difference. This operation ensures an even temperature distribution throughout the building, thus acting as a fully automatic variable de-stratification fan.

Switch of delta-T-regulation
Should this delta-T-regulation not be required, in the Menu Program Settings on the room thermostat this regulation can be switched off. See user manual of the special Winterwarm Room thermostat.

5.4 Summer ventilation

It is possible to let the ventilator run on a certain speed in the summer. Please follow the instructions in the manual from the thermostat.

5.5 High limit protection

5.5.1 T max. Heat exchanger

The unit contains 2 temperature protections. The NTC thermostat monitors the air temperature electronically. Should the temperature, as a first step, become too high, the burner will modulate to the minimum input and the system fan will modulate to the maximum speed.
When the temperature still increases, the burner will switch off. The display will show E05 / E36. When the heat exchanger has been cooled to normal levels the burner will start automatically. Should the temperature increase to an unacceptable level, the heater stops. The display will show L31. Only after a manual reset the heater can start again. Manual reset can be done on the electronic circuit board or with the special Winterwarm Room thermostat

5.5.2 T max. Flue gas

For the application of plastic flue material on the HR heaters the maximum flue gas temperature is monitored (Tflue < 120 °C). A temperature sensor in the flue outlet the heater monitors the temperature of the flue. When the flue temperature is too high (Tflue > 110 °C), the burner modulates its capacity to the minimum. When the temperature keeps rising, and reaches 115°C, the burner stops. When after an automatic restart the situation repeats itself the heater will lock out. The error L-16 will be show in the display.

5.6 Flue Transport Supervision

The unit is provided with a pressure switch to control the transport of combustion air through the heat exchanger. It checks in the pre purge phase if there is sufficient movement of combustion air through the heat exchanger by measuring the pressure difference over the heat exchanger. If the pressure difference is too low in the pre purge phase, the fault L14 will occur. This could mean that combustion air is leaking from the heat exchanger and so the heat exchanger must be checked on leakage.

6 Putting into operation and adjustment

6.1 General

Prior to packaging, each unit is checked in detail on safety and functioning. It is adjusted to the right efficiency of combustion. In general, the heater does not need to be adjusted after installation, only a check of functioning is necessary. Also obtain a flue gas analysis and record it for later reference.
Use only a calibrated instrument !
The CO_2 value can be adjusted if the CO_2 reading differs 0,3% from its setting. Do not ever turn injudiciously the adjusting screws!
Adjustment of the gas control without a supporting flue gas analysis will invalidate the warranty.

Once the unit is installed according this manual, the unit can be put into operation. Make sure the gas pipe is clean, gastight and free from air.
Switch on the electric supply with the maintenance-switch, and open the door in order to be able to observe the first start-up and so become familiar with the functioning of the heater.
Should the gas line not be purged correctly the heater will attempt to start twice before going into a lock-out condition. Manual reset is necessary in that case.

Do not forget to instruct the end user about a safe use of the heater (presence of gas, place of the manual gas valve !), the operation of the heater (lock-out indication and reset) and about the necessary maintenance. This manual must be left with the end user.

6.2 Start by using the thermostat

Put the thermostat in the highest position. The start sequence is always the same
NOTE:The heater will always burn for minimum 4 minutes before it switches off.

6.3 Start through the display in the heater

The manual test mode trough the display in the heater will only work for maximum 10 minutes.

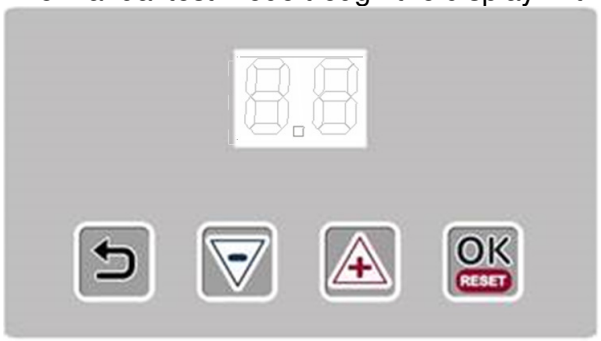

1. Hold the OK button for 5 seconds until the display shows intermediate 0.0 00 .
2. Pres the OK button 2 X , the display will show intermittent . 0.2 – 00.
3. Change the burner mode with the + and – button.
   - 0 = Normal situation, test mode is OFF
   - 1 = Brander fan to max rpm, the heater does NOT start
   - 2 = Test mode MIN power
   - 3 = Test mode medium power
   - 4 = Test mode MAX power
   - 5 = Test mode MAX power
4. Press 2 times on Return to go back to the status screen
5. When the service mode is active
   a. The display will show St – 04 when for example max power is selected.
   b. By pressing the + and – button, the test mode can be changed. Confirm the setting by pressing OK.
6. To exit the test mode, set the value to 0 and conform with OK.
7. After exit the system fan will always perform a post purge.
8. After 10 minutes the test mode will automatically end.

7 Adjusting the gas-control

In principle, it is **not** necessary to adjust the gas control after putting the unit into operation. In case it needs to be adjusted, (e.g. after fitting a new one), this must be done only by a qualified person. **Only use calibrated instruments !** A poor adjustment can lead to overheating and / or production of the poisonous carbon monoxide !.

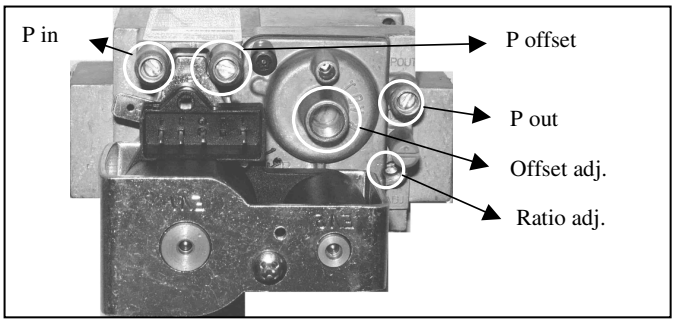

There are two screws to adjust the gas control, the Offset adjuster and the Ratio adjuster.
The Offset adjuster is used in Low fire. The Ratio adjuster is used in High fire.

Put the heater into operation at high fire through the display in the heater, Mode 4.

If the heater does not ignite while sparking, you can, if necessary, close the air-openings of the coloured ring on the gas-air mixer with thumb and forefinger during ignition. The mixture will become richer and will ignite more easily.

Look for the correct CO_2 values in the table with technical data.
Readjust the CO_2 when the deviation is more then 0,3%

1 **Check the CO_2 in High fire (mode 4)**

Decrease CO_2 → turn the Ratio adjuster to the right (less gas).
Increase the CO_2 → turn the Ratio adjuster to the left (more gas).

2 Then **check the CO_2 in Low fire. (mode 2)** The CO_2 in low fire is lower than the high fire CO_2.

Decrease the CO_2 → turn the Offset adjuster to the left.
Increase the CO_2 → turn the Offset adjuster to the right

After adjusting the CO_2 in Low fire, return to high fire, and Readjust the CO_2 with the Ratio adjuster.
Then return to Low fire again and eventually readjust the CO_2 with the Offset adjuster.

Repeat these steps until both values are OK.

Never forget to check the CO (carbon monoxide) production of the heater!!! Too much CO means mostly that the mixture is too rich. CO value should always be below 100 ppm.

8 Problem solving

8.1 General

When it turns out that the problem is **not** caused by the external circumstances (i.e. no electric supply power or no gas), please take the following instructions into account. Please remember the built in waiting times of the heater (do not react too soon!) and the signals of the LEDs and the code on the display on the electronic circuit board.

Volatile lock out Can only be reset by hand

Display		Explanation	Cause
L-0	Internal error	Internal error	13
L-1	Ignition error	After ignition only 5 seconds flame	1
		No flame	2
L-2 L-3	Internal error	Internal error	13
L-4		E- error longer than 24hr	12
L-5	Burner fan	Burner fan does not work.	6
L-6 L-7	Burner fan	Burner fan rotates at the wrong speed.	7
L- 8, 9, 10, 11, 12	Internal error	Internal error	13
L-13	Pressure switch	Pressure switch is closed in stand by	14
L-14	Pressure switch	Pressure switch does not close at pre-purge	11
L-15	Overheat	Sensor heat exchanger is overheated	3
L-16	Flue temp.	Flue sensor is overheated	3
L-17, 18, 19	Internal error	Internal error	13
L-20	Flame error	Flame detected after closing gas valve	15
L-21	Flame error	Flame detected before opening gas valve	16
L-20	Flame error	Flame failure during burning detected	5
L-25	Sensor error	Sensor heat exchanger fault	4
L-26	Sensor error	Flue sensor fault	4
L-27, 28, 29, 30, 31	Internal error	Internal error	13
L-32	Sensor	Sensor heat exchanger fault	4

	error		
L-33, 34, 35, 36, 37, 38	Internal error	Internal error	13

Temperately errors, the will disappear when the cause is taken away

Display		Explanation	Cause
E00, to 04	Internal error	Internal error	13
E-05	Overheat	Overheat heat exchanger sensor	3
E-06 to 13	Internal error	Internal error	13
E-14	Flame error	Flame detection when that should not be	16
E-15 to 22	Internal error	Internal error	13
E-23, 24	Flue sensor	Flue sensor not detected	
E-30-31	Flue sensor	Flue sensor shortened	
E-34	Reset button	Too many reset actions in a short time	9
E-36	Overheat	Overheat heat exchanger sensor	3
E-38, 39	Heat exchanger sensor	Sensor heat exchanger not detected	4
E-48, 48	Heat exchanger sensor	Heat exchanger sensor shortened	4

Case 1: Within 5 sec flame, then flame failure.

- The flame is not detected. Check the ignition cable and electrode. (cable resistance 1k Ohm).
- The electrical earth of the heater is poor,
- The print board is defective.

Case 2:

- There is not enough gas pressure.
- The mixture of gas/air is poor, adjust the gas valve
- The gas valve does not open, check during ignition for 230V on the valve.
- Check whether the ignition electrode sparks, replace cable, electrode

Case 3: Heat exchanger too hot

- Check whether the system fan blows enough air.
- Check the setting of the gas valve, the heater may me overloaded.

Case 4: Temperature sensor on heat exchanger error.

- The sensor has internally 2 sensors. These differ too much. Measure the resistance from each sensor, the resistance should be 20K at 25° en 25K at 20°. If the measured values differ too much, replace sensor.
- L-25 is heat exchanger sensor, L-26 is flue sensor

Case 5: Too many flame failures while burning

- The setting of the gas valve is not ok, adjust the gas valve
- The flue outlet is blocked

Case 6: The premix does not run

- Premix fan is Blocked or the wiring is bad
- Premix fan is defective

Case 7: The pre-mix fan runs, but not the correct speed.

- Check if the fan runs smoothly.
- Check the wiring.

Case 9: Reset button error

- Too many switches on reset button in a short period of time. These error will disappear after some time, or if the main power is disconnected for a while.

Case 10: Safety relay error
- Plug J2 is not connected well, the bridge on connector J2 between 1 and 4 is not connected well.
- Otherwise change print board.

Case 11: Insufficient air transport over the heat exchanger
- Check the pressure switch and the connections
- Check the heat exchanger for flue leakage

Case 12: E-fault is 24 hours present.
- An E fault should disappear after a while. When this error is present longer than 24 hr, something is wrong. Check the error code after a new power up.

Case 13: Internal error.
- Power up the heater again, else replace the print board.

Case 14: Pressure switch closed during stand by.
- When the heater is in standby, the pressure switch should be in the rest position. When it is in the closed position the contact could be stick, or water could be in the small hose.
- Replace the switch or dry the hose.

Case 15: Flame detected after closing of the gas valve.
- The gas valve closes too slow, replace the gas valve
- The ionisation electrode is wet. Dry or clean the electrode. Or change the electrode.

Case 16: Flame detected before opening the gas valve.
- Check it there is really a flame before ignition, if that is the case, replace the gas valve
- The ionisation electrode is wet. Dry or clean the electrode. Or change the electrode.

Heater does start, but shows other problems:

Heater ignites explosively, has often flame failures:
- Check the right setting of the gas control, the right CO_2 setting is important for the correct ignition.
- Check the ignition cable (1kOhm)
- Check the setting of the ignition electrode, the spark has to be formed between the electrodes and not between the electrode and the burner.

Insufficient output
- The heat output of the heater will be insufficient if there is too much resistance in the inlet- or outlet flue system. In this case the premix-burner-fan will be on full speed, but because of the high resistance too little air is moved and therefore also too little gas. The pressure in the outlet flue for example, will normally never be above 30 Pascal.

Non modulating system fan
- System fan (M1) does not start or does not vary in speed; Check first the functioning of this fan by connecting it to 230 Volts. Check with a multi-meter if the different lower tensions are secondary present on the transformer as well. The fuse could have failed. If the motor and transformer are OK, the cause of the problem must be in the heater control, as the heater control dictates the different voltages from the transformer to the fan-motor. In that case, replace the heater control.

9 Maintenance / spare parts

The heater must be inspected and cleaned regularly (once a year) by a qualified installer who understands this appliance.
This is all the more important as the circumstances are heavier, especially in case of dust, humidity, high frequency of switching on/off etc.

Activities:

9.1 General inspection

- Check the overall condition of the installation. Check the heater, the thermostat, the wires and the gas line.

- Clean and inspect the condensate pipes and the siphon every year. Always fill the siphon after cleaning with water to prevent flue gas escaping in the room.

9.2 Inspection of the heater

Before starting the inspection, switch off the electric power to the heater with the maintenance-switch and close the manual gas valve.

- Take out the burner, complete with flange and pre-mix fan, by unscrewing the 6 off M6 socket screws and you have taken off the ignition and fan wires
- Check the heat exchanger from the inside for dirt and/or damage.
- Check the burner on damage and clean the ignition electrode if necessary . CAUTION: do not twist the electrode out of shape!
- Check the air supply and the flue discharge.
- Clean eventual the inside of the heater with a vacuum cleaner.
- In case the heat exchanger is dirty on the outside, clean it with a soft brush. Never use a steel wire brush!
- Clean the fan-grid with a vacuum cleaner and a brush.
- Put the burner back in (renew the gasket)

After this, check the heater on efficiency of combustion and adjust these if necessary
Check the heater operates correctly.

9.3 Ignition electrode

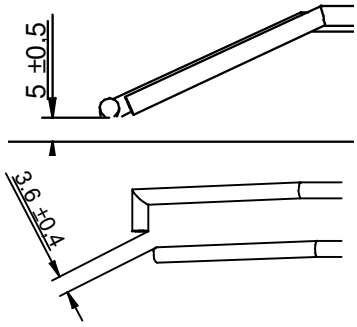

For the correct ignition of the burner it is important that the ignition electrode is adjusted right.

- The distance between the electrode and the burner should be 5.0 ±0.5 mm.
- The distance between the two electrodes should be 3.6 ±0.4 mm.
- Check the setting of the ignition electrode, the spark has to be formed between the electrodes and not between the electrode and the burner.

10 Examples electrical installation:

10.1 Thermostat cable

In all cases the communication between the heater and the thermostat is based on a two wire, low-voltage connection. In the appliance the wire for the thermostat has to be connected to connection 4 and 5 (see also electrical wiring diagram).

Cable specification: signal cable, 1x2x0,8 (shielded and twisted)
Maximum length 200m.

If the cable is chosen too thin, the signal will become too poor. If the cable is not shielded and twisted the signal my become disturbed in an EMC unfriendly environment.
Keep the thermostat cable separated from mains cables. Connect the earth shield of the cable only to the earth terminal in the heater.

If these guidelines are not followed it may result in malfunction of the installation or worse, it could damage the thermostat or the electronics in the heater.

Never mount the thermostat near aerials of internal communication networks. These emit radiation that could lead to disturbance of the thermostat. Always keep some meters distance.

10.2 Installation with modulating room thermostat

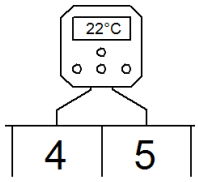

- Connect the heater to Mains
- Connect the thermostat to the terminals according to the diagram. (terminal 4 and 5)

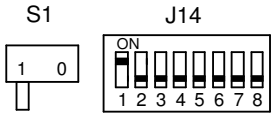

- On the print the switches S1 and J14 need to be set as follows: S1 switch 1 at the ON position, and J14 at 1.

The change of these switches need to be performed without power on the Heater, otherwise these settings take no effect.

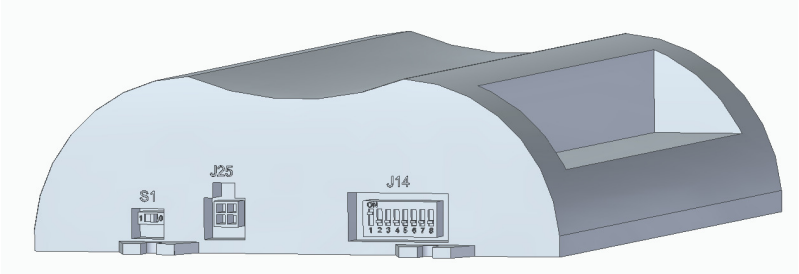

10.3 Installation of more heaters on one thermostat

One room thermostat can control 8 heaters. To connect the heaters is very simple. The two wires for the thermostat can be connected to heater one, from heater one to heater two , from heater two to heater three etc. etc. Connect always on terminals 4 and 5. See also the diagram.
Standard factory setting: switch S1 “on”.

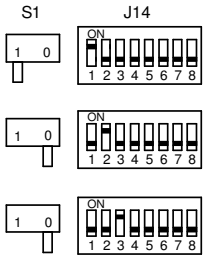

Each heater needs his own unique number to recognise the heater by the room thermostat. The number of the heater can be set by the micro switch on the heater control in the heater. The number at the upper position of the switch is the given number for that heater. Make sure that each heater has its own unique number. If more than one heater has the same number the system does not work.

The change of these switches need to be performed without power on the Heater, otherwise these settings take no effect.

Diagram for more heaters on one thermostat

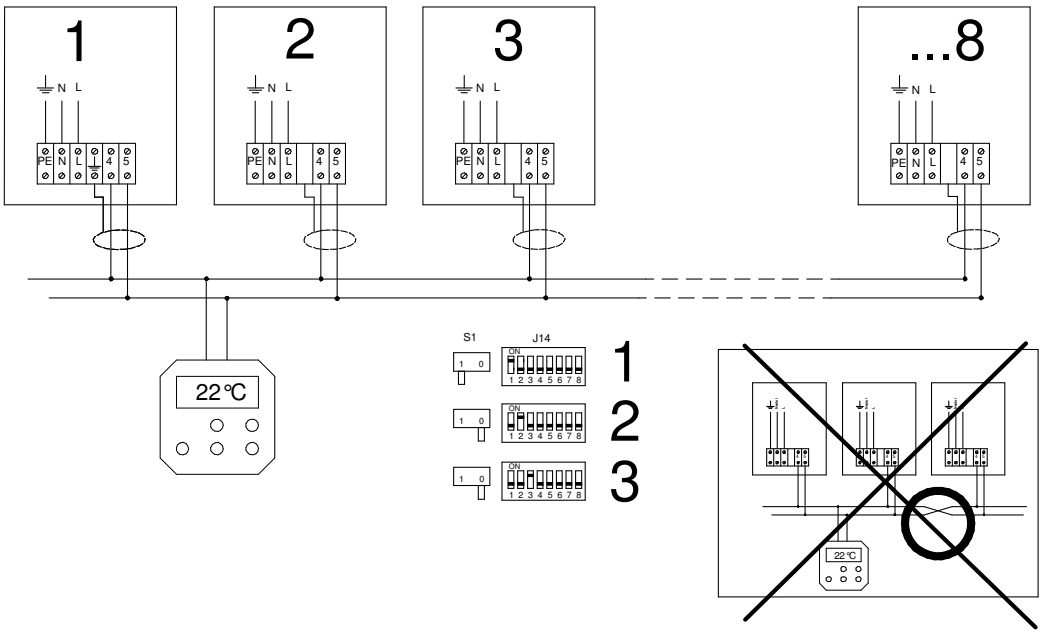

Installation diagram one room thermostat for more HR80, 100 & 120

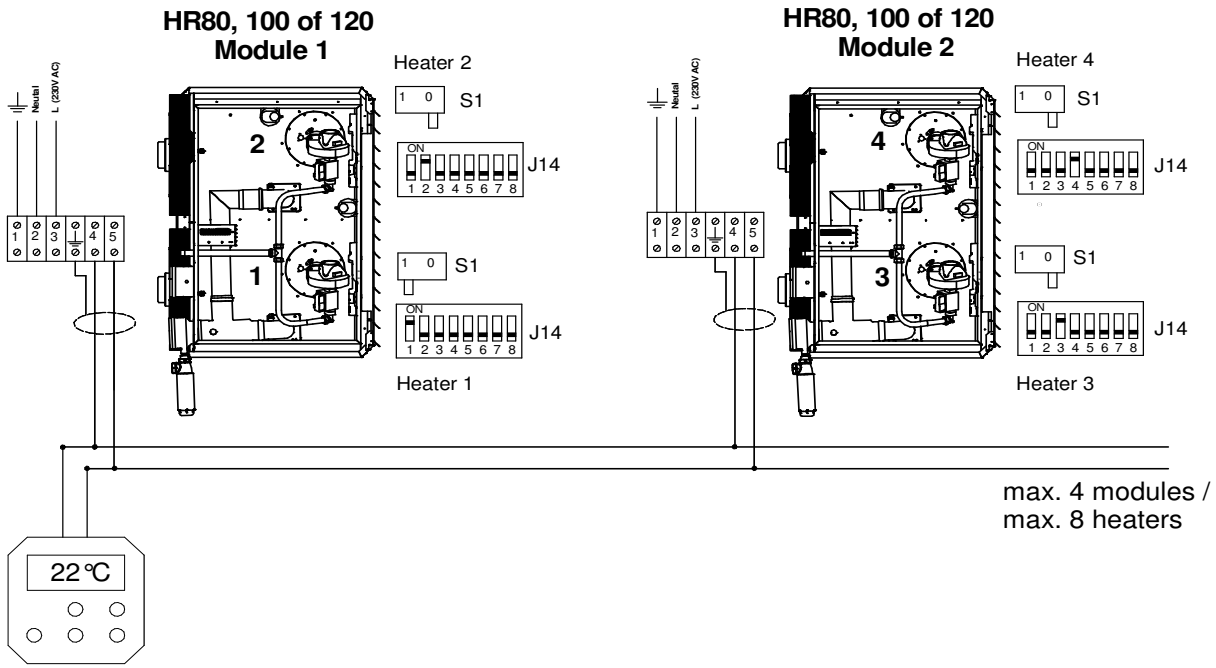

At the first HR80, 100 of 120 the dipswitches S2 en switch S3 are been set standard ex works:
Heater 1: J14 ➔ **1** en S1 ➔ **1**
Heater 2: J14 ➔ **2** en S1 ➔ **0**

In case of more heaters on 1 room thermostat (max. 4 HR80, 100 of 120 heaters) the dipswitches S2 en switches S3 has to been set on:
Heater 1: J14 ➔ **1** en S1 ➔ **1**
Heater 2 up to 8: 12 resp. **2** up to **8** en J14 ➔ **0**.

11 Electrical diagram

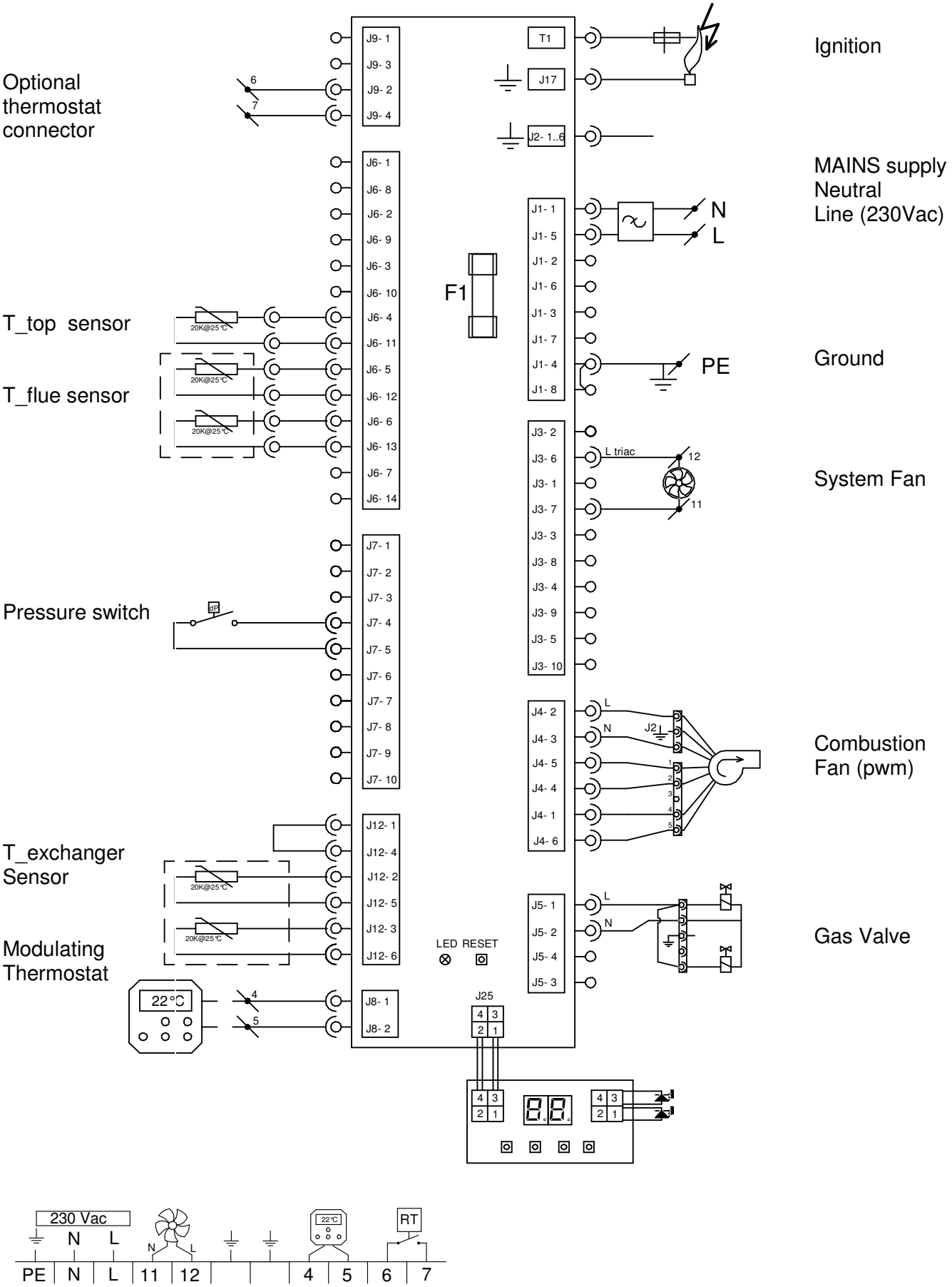

12 Exploded views and spare parts

12.1 Spare parts

No.	Component	HR-10	HR-20	HR-30	HR-40	HR-50	HR-60	HR80	HR100	HR120
1	Burner Natural gas	GA3206	GA3207	GA3208	GA3208	GA3210	GA3212	GA3208	GA3210	GA3212
1	Burner Propane	GA3224	GA3226	GA3228	GA3228	GA3230	GA3232	GA3228	GA3230	GA3232
2	Ignition / ionisation set	GA3460	GA.3460	GA3460	GA3460	GA3460	GA3460	GA3460	GA3460	GA3460
5	Burner fan EBM	GY4523	GY4523	GY4523	GY4523	GY4523	GY4523	GY4523	GY4523	GY4523
6	Gas valve SIT SIGMA 848	GA3000	GA3000	GA3000	GA3000	GA3000	GA3000	GA3000	GA3000	GA3000
7	System fan	IX4201	IX4201	IX4201	IH4206	IH4206	GX4207	IH4206	IH4206	GX4207
8	Main board EBM 966	GY5901	GY5901	GY5901	GY5901	GY5901	GY5901	GY5901	GY5901	GY5901
9	Pressure switch	GX3932	GX3932	GX3932	GX3932	GX3932	GX3932	GX3932	GX3932	GX3932
10	Sensor heat exchanger	GY3932	GY3932	GY3932	GY3932	GY3932	GY3932	GY3932	GY3932	GY3932
11	Gasket set	GA6702	GA6702	GA6702	GA6706	GA6706	GA6706	GA6706	GA6706	GA6706
12	Burner isolation	GA6700	GA6700	GA6700	GA6704	GA6704	GA6704	GA6704	GA6704	GA6704
13	External sensor	IY3931	IY3931	IY3931	IY3931	IY3931	IY3931	IY3931	IY3931	IY3931
14	Display pcb	GY5902	GY5902	GY5902	GY5902	GY5902	GY5902	GY5902	GY5902	GY5902

12.2 Exploded view HR10-60

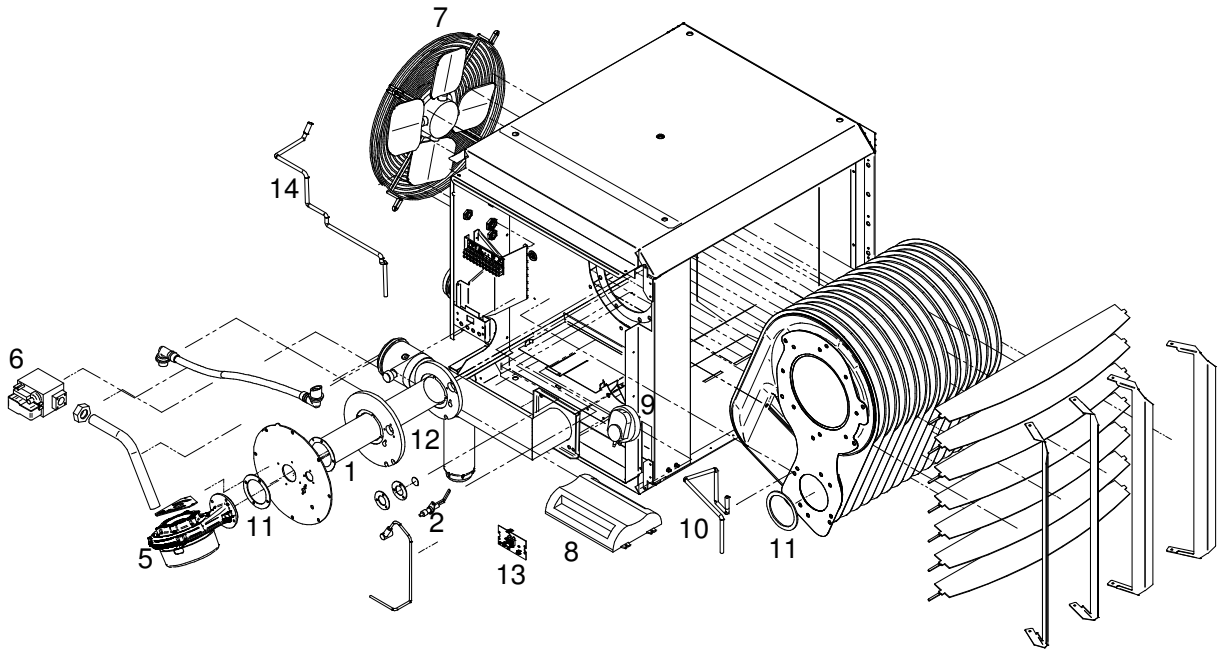

12.4 Exploded view HR80-120